GP1690

# Pirate Ships (Pk/12)

***SO MUCH FUN FOR EVERYONE!***

## *MAKING IT EASY to SAVE MORE on your next order!*

**$10 OFF**
*Your Next Order of only $39.00 or more.*

Please mention Offer Code: **M2467**
Minimum order $39 excludes shipping and taxes.
Limit one per order.
May not be combined with other offers
or bid or contract pricing.
See current S&S® catalog or Help at
ssww.com for Offer Terms and Conditions.
We reserve the right to terminate this
offer at any time without notice.

**Call Toll-Free**
**1-800-243-9232**

**Online:**
**ssww.com**

**Customer Service:**
**1-800-937-3482**

**Email:**
**cservice@ssww.com**

**FAX:**
**1-800-566-6678**

S&S® Worldwide

© Copyright 2012 S&S® Worldwide Inc. All rights reserved. No part of this project may be copied or duplicated without the express written permission of S&S Worldwide.

Reorder Number

GP1690 | 1.1

S&S® Worldwide
*MAKING IT EASY*
*to Help People Play and Learn*

Gee-Perz®
Just Add Imagination... We Provide the Rest!

# Pirate Ships (Pk/12)

PLEASE READ ALL INSTRUCTIONS BEFORE STARTING

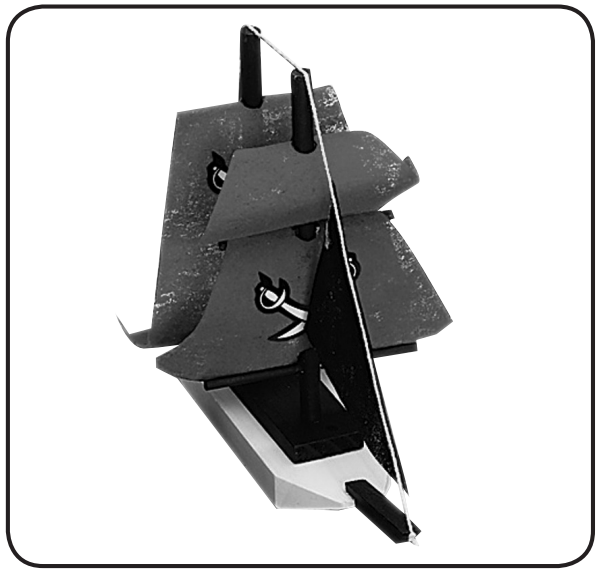

**AGE GROUP: 7 and up**
**PROJECT TIME: 60 minutes**

**YOU WILL NEED:**
- Water
- Scissors
- Paper Towel

**YOUR KIT CONTAINS:**
- Large Wood Hull
- Large Wood Main Cabin
- Cabins
- String
- Small Wood Rear Cabin with Staple
- Paint
- Long Wood Bowsprit
- Sand Paper
- Pirate Stickers
- Paint Brushes
- White Cloth
- Glue
- Wood Dowels
- Plastic Table Cover

GP1690

## PROJECT INSTRUCTIONS:

1. Cover your work area with tablecloth.

2. Check all parts of ship for proper placement and sand smoothly, if necessary. Plan your sail design to decide if your ship will have 1-part, 2-part or 3-part sails. Insert the correct amount of small sail dowels into the large mast dowel accordingly. Insert the shortest sail dowel at the top and longer sail dowels at the bottom. Repeat for second mast.

3. Paint both masts and set aside to dry. While these dry, paint the hull, large main cabin, bowsprit and small rear cabin. Set these aside to dry.

4. While the ship pieces dry, make your sails. Take the fabric and cut out the jib and sails that match the design you choose. Starting with the bottom sail, glue the longer side of the sail (lower part) to the top side of the bottom sail dowel (longest one). Then, glue the shorter side of the sail (upper part) to the top side of the next sail dowel. Repeat up the mast as necessary (see Figure A). Set aside to dry.

5. Glue large main cabin to center of hull. While the glue is wet, insert the two masts into the main cabin.

6. Attach string to rear cabin by tying a knot around the staple. Glue rear cabin and bowsprit (see Figure B).

7. Gently pull string over tops of both masts and loosely secure the end of the string by tying a knot below notch at the bowsprit. Remove the string from the bowsprit and glue the long edge of the jib about 1" away from the knot. When glue is dry, replace string over tops of both masts and secure the knot at the bowsprit with glue. Add a small amount of glue to the tops of each mast to secure the string. Trim off any excess string. Use supplied stickers to decorate your sails.
Yo-ho, you're done!

Figure A

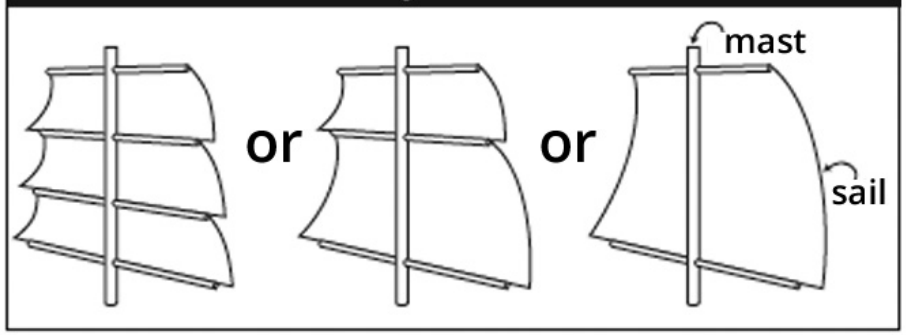

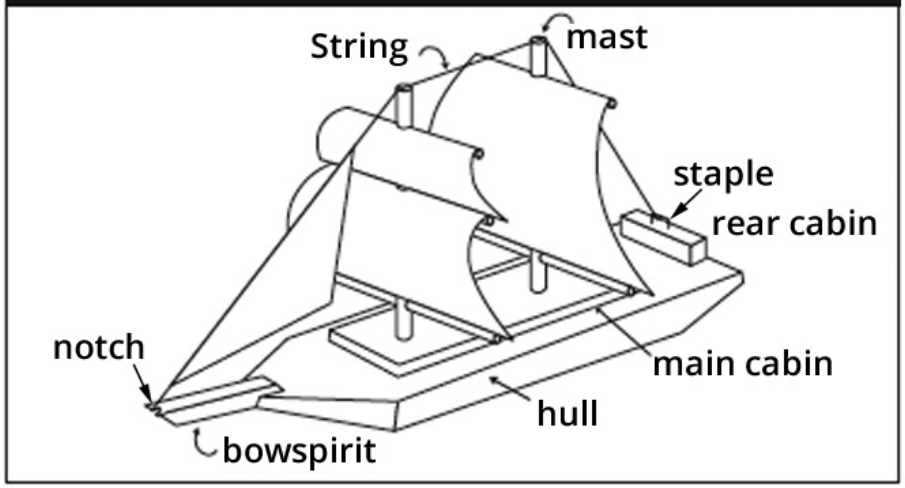
Figure B