GP1777 | Wooden Birdhouse (Pk/12)

MORE IDEAS...

Your birdhouse may be suitable for outside use if it is coated with a varnish and sealant.

Your finished birdhouse makes a great decoration for the centerpiece of a table, by adding some silk flowers or artificial birds.

MAKING IT EASY to SAVE MORE on your next order!

$10 OFF
Your Next Order of only $39.00 or more.

Please mention Offer Code: **M2467**
Minimum order $39 excludes shipping and taxes.
Limit one per order.
May not be combined with other offers or bid or contract pricing.
See current S&S® catalog or Help at ssww.com for Offer Terms and Conditions.
We reserve the right to terminate this offer at any time without notice.

Call Toll-Free
1-800-243-9232

Online:
ssww.com

Customer Service:
1-800-937-3482

Email:
cservice@ssww.com

FAX:
1-800-566-6678

S&S Worldwide

© Copyright 2012 S&S® Worldwide Inc. All rights reserved. No part of this project may be copied or duplicated without the express written permission of S&S Worldwide.

Reorder Number
GP1777 | 1.1

S&S® Worldwide
MAKING IT EASY
to Help People Play and Learn

Gee-Perz®
Just Add Imagination... We Provide the Rest!

Wooden Birdhouse (Pk/12)

PLEASE READ ALL INSTRUCTIONS BEFORE STARTING

YOUR KIT CONTAINS:
- Wooden Birdhouse Pieces
- Wooden Decorative Pieces
- Paint
- Brushes
- Glue
- Sandpaper
- Plastic Table Cover

AGE GROUP: 7 and up
PROJECT TIME: 45 minutes

YOU WILL NEED:
- Containers of Water
- Paper Towels
- Permanent Markers (optional)

GP1777

INSTRUCTIONS:

1. Lightly sand all the pieces to create smooth surfaces and edges.

2. The birdhouse will slot-fit together. The pieces may be painted first or the birdhouse may be assembled and then painted.

3. The dowels and flower piece should be connected to the front first. There should be about 1/2 inch of space between the hedge and the front of the house.

BIRDHOUSE ASSEMBLY

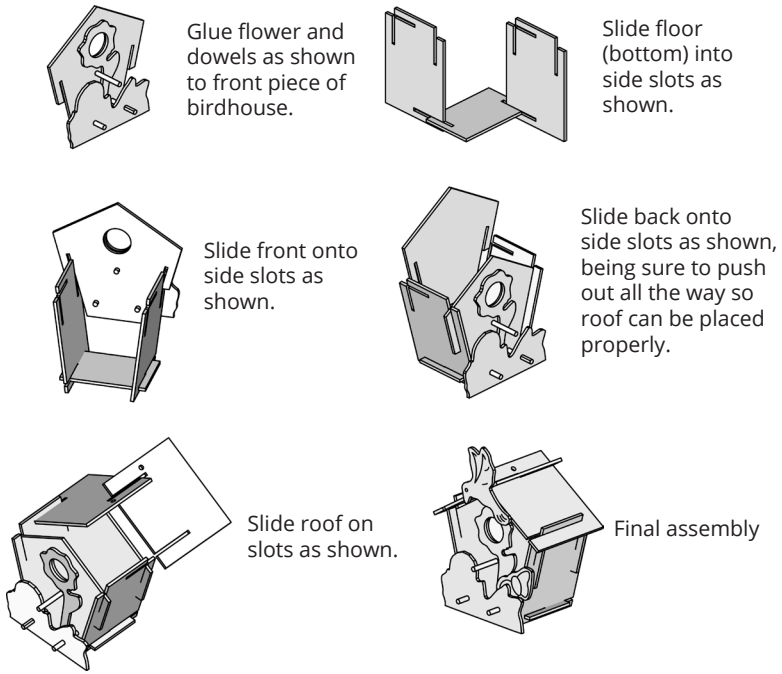

4. Glue the bird and butterfly decorations onto the house (shown above).
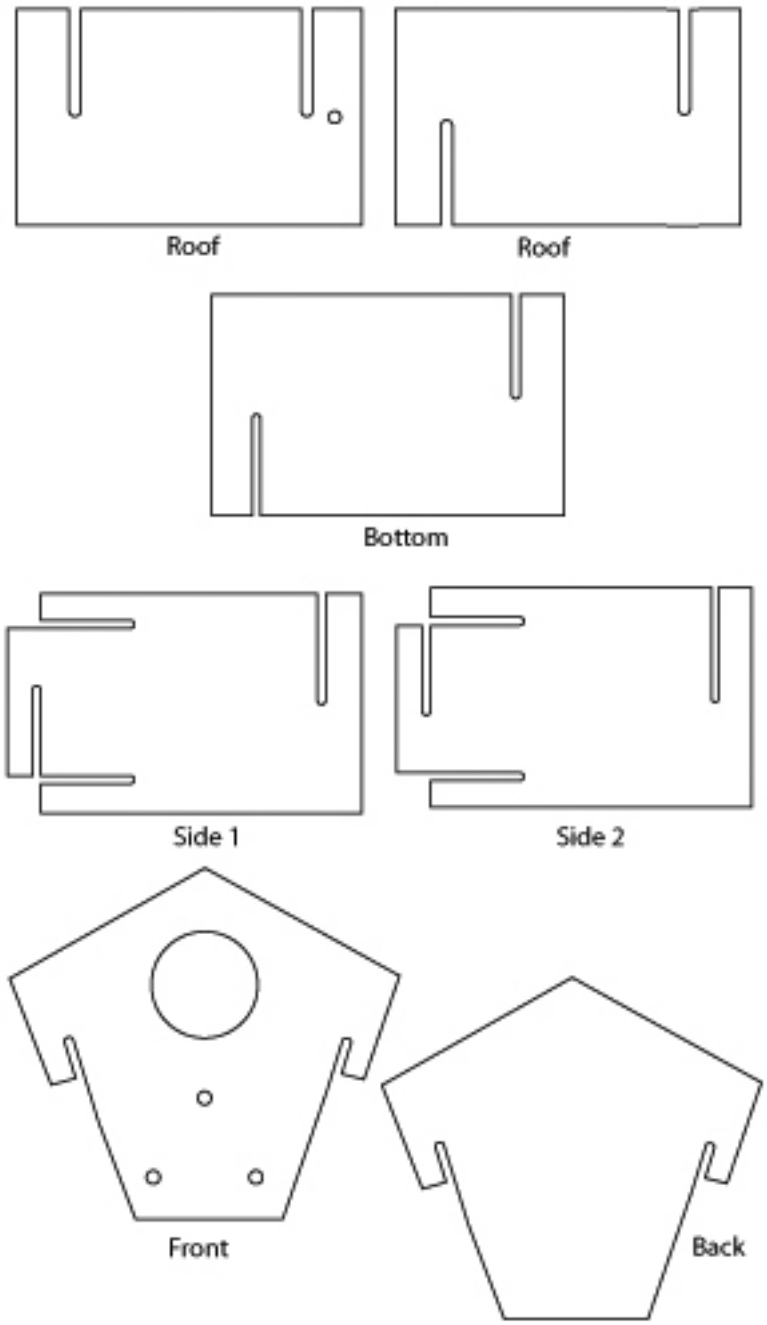
5. Use a permanent marker to add detail to your birdhouse after the paint has dried (optional).