General Wood Instructions

Sanding

The rule of sanding is “Never across the grain”.

1. Do not tear sandpaper. If you do, the ragged edges will often scratch the wood surface.
2. For flat surfaces, wrap a piece of sandpaper around a block of wood or use a store bought holder. Start with a coarse grade of paper and finish with a fine grade of paper(not included).
3. Be consistent. Do not sand one area with fine and another with coarse grade.

Staining

1. Be sure the wood surface is smooth and clean. Stains can accentuate any roughness or scratches of cross grain sanding. Wipe off any dirt or dust with a soft cloth.
2. A base coat of sealer/primer and a light sanding before applying stain will insure a uniform stain.
3. Apply stains in one direction following the wood grain. Use a soft brush or foam brush. Let the stain penetrate the wood, then wipe off excess stain with a soft cloth.
4. If stain looks too dark, dampen the cloth with water/thinner and wipe until you achieve the desired color. If stain is too light, let dry, then apply another coat of stain and wipe off.

Finishes

1. Outdoor projects may be finished with polyurethane or varnish.

These are toxic and must be used in a well ventilated area. Indoor projects may be finished with decoupage or left unfinished.

Safety First!

This Product May Contain Silicon Gel Packets.
REMOVE PRIOR TO USE!

Bank Truck Item# WD3202

S&S Worldwide

CALL TOLL-FREE 1-800-243-9232
or **Mail Your Order** to: S&S Worldwide
PO Box 513
Colchester, CT 06415-0513
FAX #: 1-800-566-6678
Customer Service: 1-800-937-3482
Internet home page address: http://www.sssww.com
Email address: service@sssww.com

© Copyright 2007 S&S Worldwide Inc. All rights reserved. No part of this project may be copied or duplicated without the express written permission of S&S Worldwide.

Item No. WD3202 Made in China

Bank Truck

PLEASE READ ALL INSTRUCTIONS BEFORE STARTING

- ✓ Wooden Pieces
- ✓ Wooden Dowels
- ✓ Sandpaper
- ✓ Instructions

YOU WILL NEED...

Paint or Stain
Wood Glue
Brushes
Protected Work Surface

PREP TIME: 5 MIN

PROJECT TIME: 30 MIN
Plus drying time.

WARNING:
CHOKING HAZARD - Small parts. Not intended for children under 3 years.
SUFFOCATION HAZARD - To avoid danger of suffocation, keep plastic bags away from babies and children. Do not use bags in cribs, carriages, or playpens.

S&S Worldwide

WD3202

START

Product Instructions:

1. Check all parts for proper placement. For best results, sand and paint before assembly, avoiding areas to be glued.

2. Glue where you see this symbol:

3. Glue 2 sides (A) to the long edges of front and back sides (B). Then glue all 4 sides to the chassis (C).

4. Glue the slotted roof (D) to the top of the cab.

5. Glue the engine (E) in place.

6. Glue the headlights (F) to the engine.

7. Glue a wheel at each end of each axle.

8. Insert an axle into the slot of each axle housing (G). Glue the axle housing (G) to the bottom of the chassis (C). While you are doing this, be sure that no glue bonds the axles.

FIGURE A

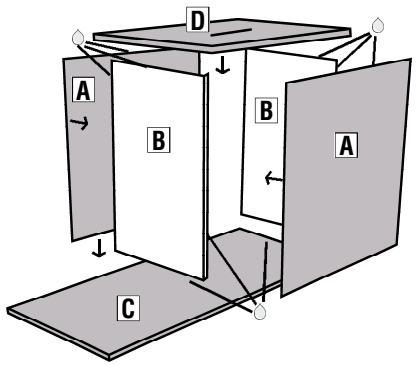

FIGURE B

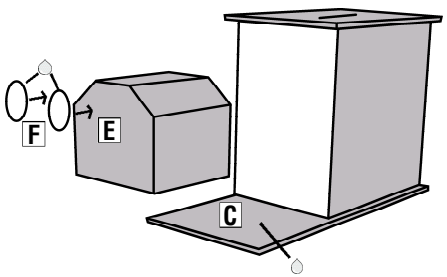

FIGURE C

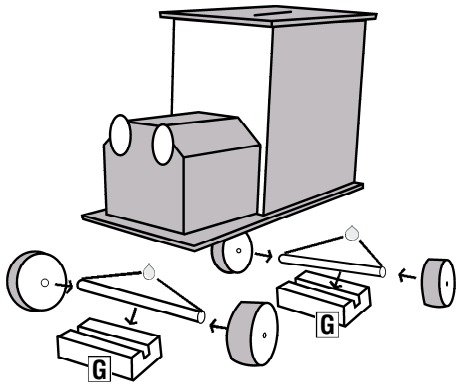

FINISH