ASSEMBLY TYPICAL FOR
UPRIGHTS AND CROSSBARS

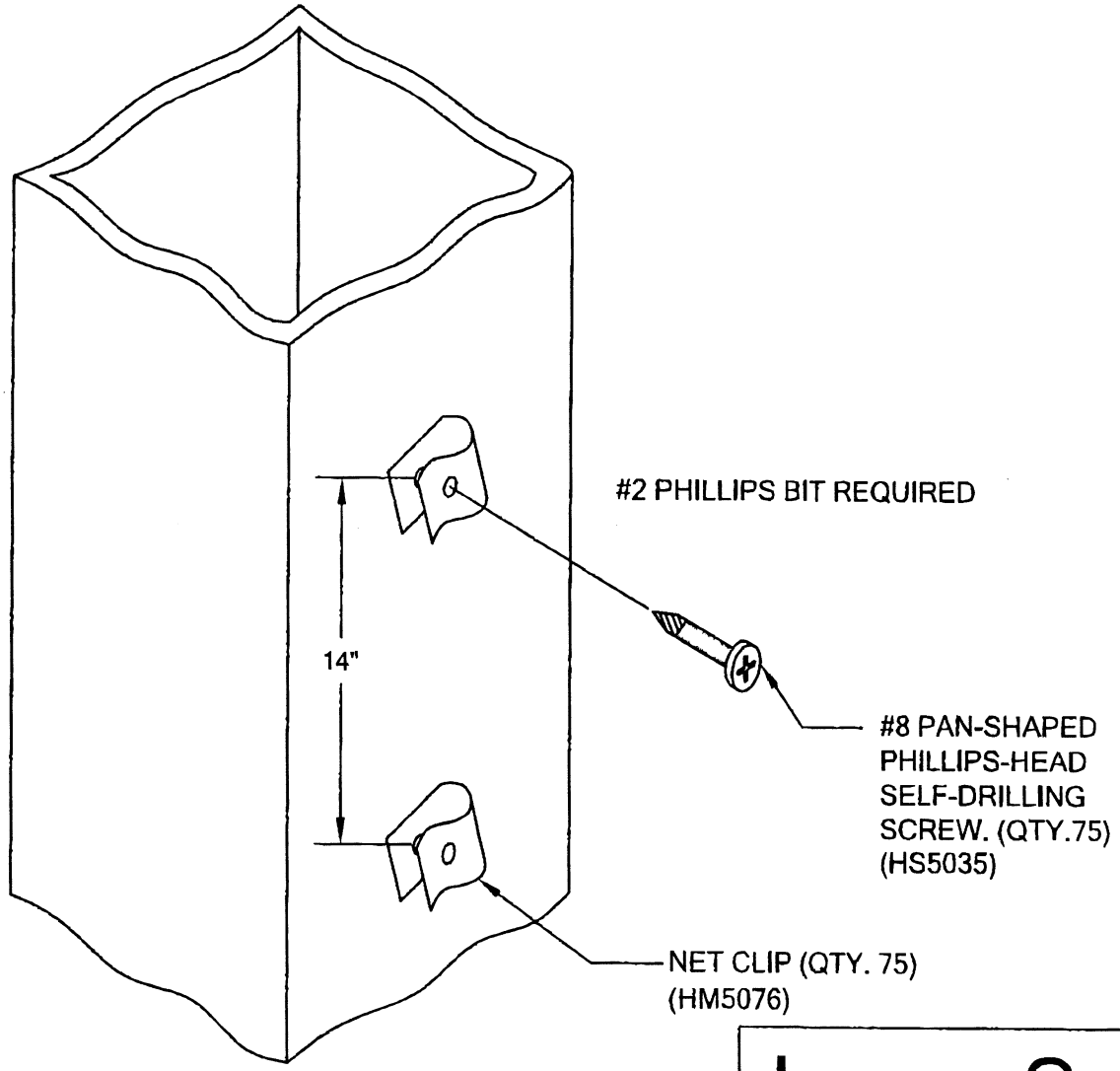

ASSEMBLY INSTRUCTIONS

1) FOR BEST RESULTS, USE AN ELECTRIC POWERED HAND-HELD SCREWDRIVER WITH A #2 PHILLIPS BIT. ROUGHLY LAY OUT THE PLACEMENT OF EACH NET CLIP 14" ON CENTER OF THE REAR SIDE OF EACH UPRIGHT AND CROSSBAR.

2) PLACE A SELF-DRILLING SCREW ONTO THE #2 PHILLIPS BIT AND THROUGH THE MOUNTING HOLE OF THE NET CLIP. POSITION THE TIP OF THE SCREW IN THE PROPER LOCATION AND DRIVE IT FULLY INTO THE MATERIAL. REPEAT THE PROCESS FOR ALL REMAINING NET

EACH UPRIGHT- SEVEN CLIPS

EACH CROSSBAR-TWENTY CLIPS

Jaypro Sports
976 Hartford Turnpike
Waterford, CT 06385 USA
(800)243-0533
(800)988-3363 Fax
www.jaypro.com

MODEL NO.:
SNT-200

PRODUCT NAME:
SOCCER NET TIES

DRAWN BY: JAC

EFFECTIVE DATE:
6-2-03

NET CLIP MOUNTING LAY-OUT DIAGRAM FOR THE FOLLOWING MODELS: SGP-760, SGP-728, SGP-730, SGP-730EB, SGP-100, FBSC-200, SGP-3000

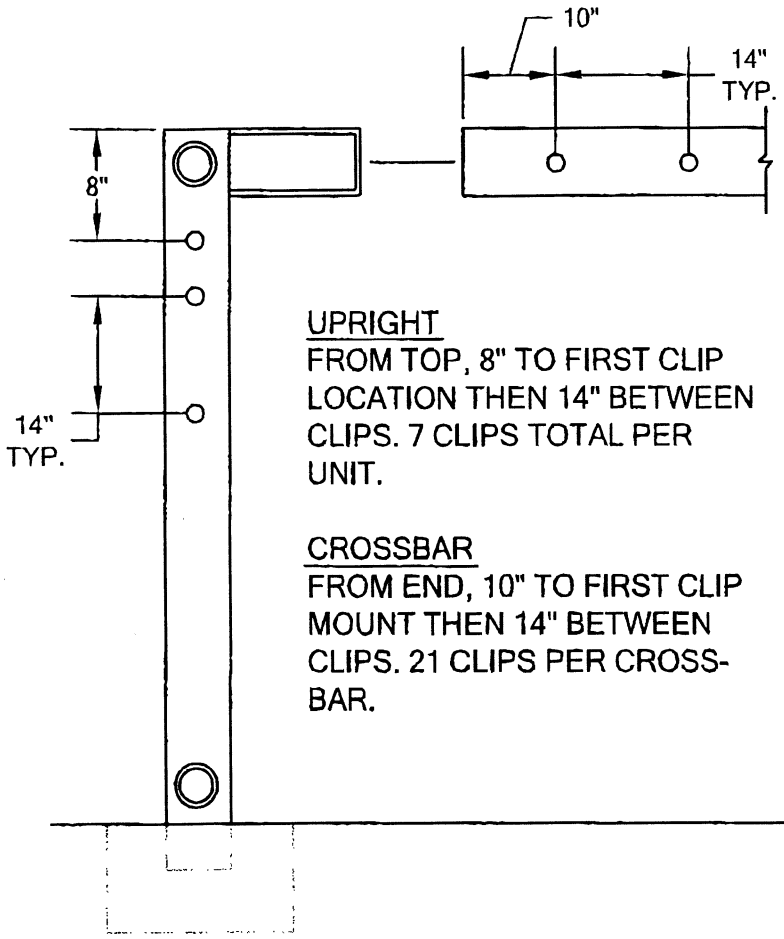

UPRIGHT
FROM TOP, 8" TO FIRST CLIP LOCATION THEN 14" BETWEEN CLIPS. 7 CLIPS TOTAL PER UNIT.

CROSSBAR
FROM END, 10" TO FIRST CLIP MOUNT THEN 14" BETWEEN CLIPS. 21 CLIPS PER CROSS-BAR.

NET CLIP MOUNTING LAY-OUT DIAGRAM FOR THE FOLLOWING MODELS: SGP-400, SGP-550, SGP-3500

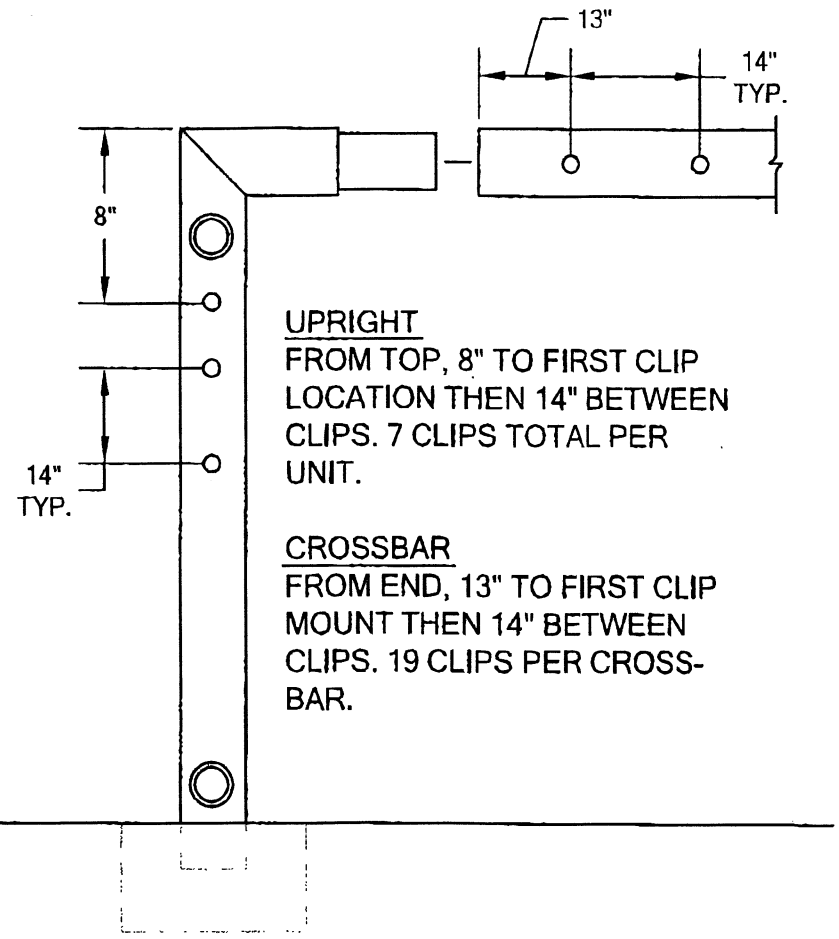

UPRIGHT
FROM TOP, 8" TO FIRST CLIP LOCATION THEN 14" BETWEEN CLIPS. 7 CLIPS TOTAL PER UNIT.

CROSSBAR
FROM END, 13" TO FIRST CLIP MOUNT THEN 14" BETWEEN CLIPS. 19 CLIPS PER CROSS-BAR.

Jaypro Sports
976 Hartford Turnpike
Waterford, CT 06385 USA
(800)243-0533
(800)988-3363 Fax
www.jaypro.com

MODEL NO.:
SNT-200

PRODUCT NAME:
NET CLIP INSTALLATION DIAGRAM

DRAWN BY: JAC

EFFECTIVE DATE:
11-20-03