Part No. 49064
Revised: March 2004

P-60 and 60 Special

Popcorn Machine Instruction Manual

Model #1866, #2085, #2086 and #2656

Models #1866 and #2086

Models #2085 and #2656

GOLD MEDAL®
FUNFOOD EQUIPMENT & SUPPLIES
Cincinnati, OH 45241-4807 USA

SAFETY PRECAUTIONS

⚠ DANGER

Machine must be properly grounded to prevent electrical shock to personnel.
Do NOT immerse the kettle, warmer, or any other part of this equipment in water.
Always unplug the equipment before cleaning or servicing.

⚠ WARNING

Any alterations to this equipment will void the warranty and may cause a dangerous situation. NEVER make alterations to the equipment.
Make sure all machine switches are in the OFF position before plugging the equipment into a receptacle.

⚠ WARNING

To avoid serious burns, do NOT touch the kettle while it is hot.

⚠ WARNING

Adequate eye protection must be used when servicing this equipment to prevent the possibility of injury.

⚠ CAUTION

This equipment is designed and sold for commercial use only. This equipment is not to be used by the consumer in home use. Do not allow direct contact of this equipment by the public when used in food service locations. Only personnel trained and experienced in the equipment operation may operate this equipment.
Carefully read all installation instructions before operating the equipment.

NOTE

The information, specifications and illustrations contained in this manual represent the latest data available at time of publication. Right is reserved to make changes as required at the discretion of Gold Medal Products Company without notice.

INSTALLATION INSTRUCTIONS

INSTALLATION

Your new 60 Special or P-60 Popcorn Machine is completely assembled. Remove all Packing material and tape before starting operation.

OPERATING INSTRUCTIONS

CONTROLS AND THEIR FUNCTIONS

There are three switches on the popper.

LIGHT AND WARMER SWITCH
Turns on the heat to the bottom corn pan and heat light.

KETTLE MOTOR SWITCH
Turns on the motor which drives kettle agitator shaft.

KETTLE HEAT SWITCH
Turns on the heat element

AMOUNT OF POPCORN AND OIL

Your new popper is equipped with a six ounce (177 ml) corn measure cup. We recommend flavored and colored coconut oil. Popcorn popped in coconut oil stays fresh longer. Coconut oil does not leave black deposits in your kettle like other oils.

Corn charge - 6 oz. (177 ml)
Oil charge - 1.6 to 2.0 oz. (60 ml)
Flavacol - 1 tablespoon (8 cc)

POPPING INSTRUCTIONS

1. Turn KETTLE HEAT and KETTLE MOTOR switch ON.
2. Make test pop with 3 kernels of corn and 1 oz. (30 ml) of oil.
3. Load pre-measured popcorn and oil pouch into kettle.
4. When corn has popped, dump kettle.
5. Repeat cycle starting with Item #3; always pop 3-5 batches for best popcorn.

CARE AND CLEANING

⚠ WARNING

Unplug your machine before cleaning glass panels and case. Never immerse the kettle in water, this will ruin the electrical components and automatically void the warranty.

Each time you finish a series of poppings, wipe the outside of the kettle with a soft cloth to remove any oil drippage on the outside of the kettle. After you finish popping for the day, allow kettle to cool until it is not too hot to handle, but still warm. Unplug kettle and remove it from the machine. With a cloth, wipe out the inside of the kettle, kettle lid, crossbar, outside and underneath of the kettle.

Cleaning the cabinet of your machine is easy. Take a clean cloth and wipe excess grease from the glass. Wipe the outside of the machine also.

NOTE: Never use a glass or plastic cleaner that contains ammonia. It will crack the plastic on the machine.

MAINTENANCE INSTRUCTIONS

⚠ WARNING

Do not immerse the kettle, warmer, or any other part of this equipment in water. Always unplug your machine before servicing.

⚠ WARNING

Adequate eye protection must be used when servicing this equipment to prevent the possibility of injury.

⚠ CAUTION

THE FOLLOWING SECTIONS OF THIS MANUAL ARE INTENDED ONLY FOR QUALIFIED SERVICE PERSONNEL WHO ARE FAMILIAR WITH ELECTRICAL EQUIPMENT. THESE ARE NOT INTENDED FOR THE OPERATOR.

ACCESSORIES

Description	Part Number
Shipping Carton	49026
Corn Measure Cup	49049
Scoop	2071
Flavacol Cup	47678

ORDERING SPARE PARTS

1. Identify the desired part by checking it against the photos, illustrations, and/or the parts list.
2. When ordering, please include part number, part name, and quantity desired.
3. Please include your model name and machine serial number (located on the machine nameplate) with your order.
4. Address all parts orders to:

Parts Department
Gold Medal Products Co.
10700 Medallion Drive
Cincinnati, Ohio 45241-4807

or, place orders at:

(513) 769-7676
Fax: (513) 769-8500
E-mail: goldme19@eos.net

60 SPECIAL & P-60 POPPER ASSEMBLY

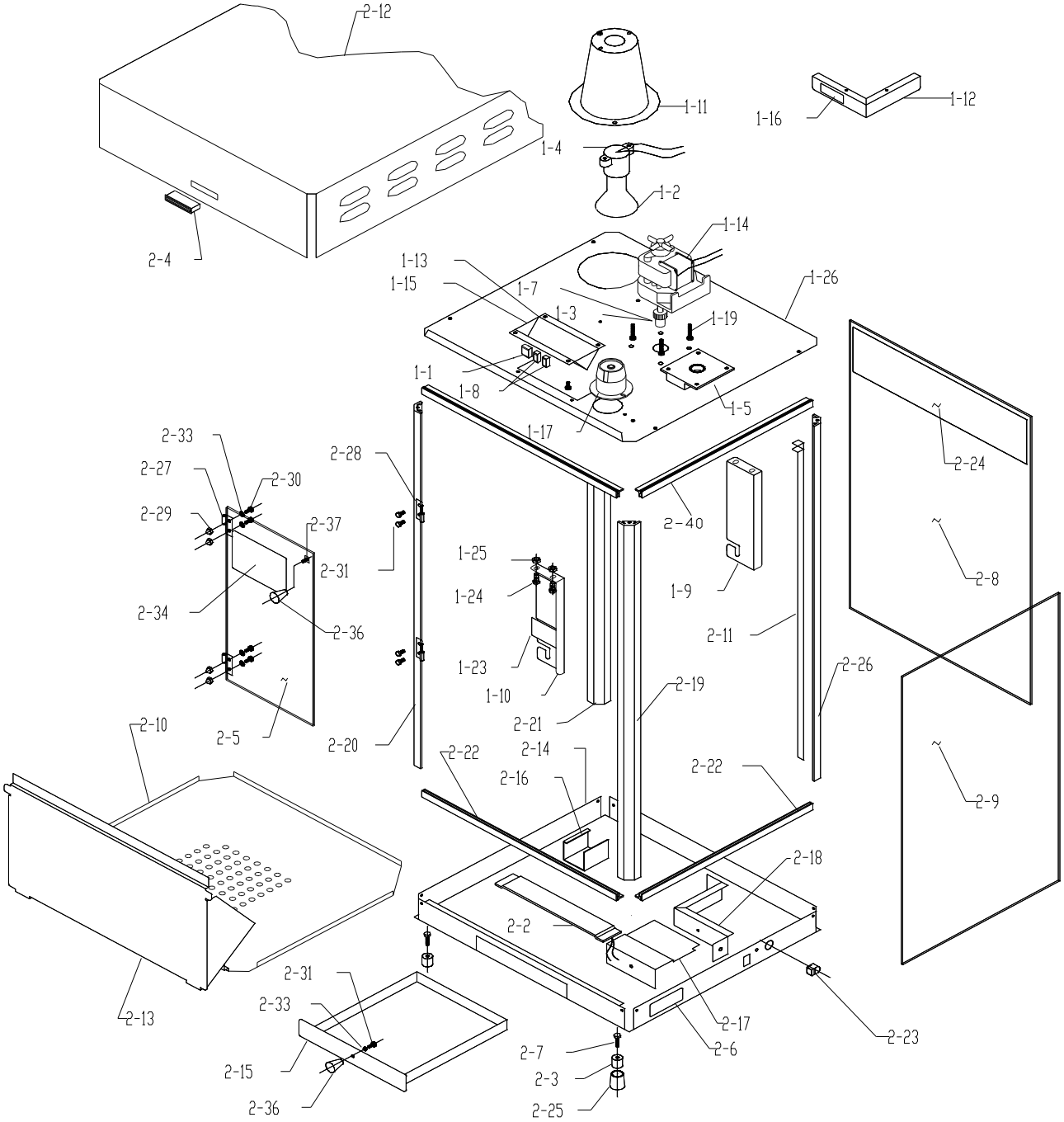

PARTS LIST - HANGER ASSEMBLY

This list is for all models.

Item No.	Part No.	Description
1-0	49336	Complete Hanger Assembly
1-1	42798	Switch - Kettle
1-2	41671	Reflector Flood Light
1-3	41742	Set Screw #10-32 x 3 /16"
1-4	47047	Lamp Holder
1-5	67194NM	Gear Box w/ Bushing
1-7	47060	Spur Gear
1-8	42532	Switch - Light and Warmer
1-9	49010	Front Hanger Arm
1-10	49009	Rear Hanger Arm
1-11	49480	Light Shield - Conical
1-12	47799	Light Shield Angle
1-13	48501	Switch Box
1-14	47038	Kettle Drive Motor
1-15	48502	Label, Switches
1-16	41452	Warning, Max Lamp 75W
1-17	49330	Receptacle
1-19	49322	#10-24 x 1 Hex Mach Screw
1-23	87087	Label, Caution Hot
1-24	14821	Bolt ¼-20 x ½" Hex HD
1-25	74133	¼-20 Hex Nut
1-26	49507	Motor Plate

PARTS LIST - CABINET ASSEMBLY

Item No.	Model #2085 Part No.	Model #2086 Part No.	Description
2-0	49589	49601	Complete Cabinet Assembly
2-1	22038	22038	Lead-In Cord *
2-2	49440	49440	Heat Element 50 Watt
2-3	47328	47328	Glide
2-4	47561	47561	Magnetic Catch
2-5	49395	49395	Door
2-6	76097	76097	Label, Unplug to Clean *
2-7	41314	41314	#10-24 x 3/4" Screw
2-8	49519	49519	Front Glass- Measures: 22 3/8" X 16 15/16"
2-9	49518	49518	Side Glass Measure: 22 3/8" X 14 15/16"
2-10	49506	49506	Bottom Corn Pan
2-11	49091	49091	Wire Duct
2-12	49452	49450	Top Pan
2-13	49145	49145	Drop Panel
2-14	49166	49097	Bottom Pan
2-15	49100	49100	Old Maid Pan
2-16	49425	49425	Strip Heater Bracket
2-17	49104	49104	Cover, Corner Cover
2-18	49105	49105	Corner Cover
2-19	49514	49605	Right Rear Corner Post
2-20	49513	49603	Left Rear Corner Post
2-21	49516	49607	Left Front Corner Post
2-22	74164	49608	Glass Extrusion 16 9/32" LG (2 Req)
2-23	76026	76026	Strain Relief #SR-6P3-4
2-24	49158	77506	Decal, Front Glass
2-25	49123	49123	Crutch Tip
2-26	49515	49606	Right Front Corner Post
2-27	61359	61359	Left Female Hinge
2-28	41349	41349	Left Male Hinge
	61373	61373	Right Female Hinge
	41350	41350	Right Male Hinge
2-29	47702	47702	#8-32 Acorn Nut
2-30	42227	42227	#8-32 x 3/8" Screws
2-31	42044	42044	#8-32 x 3/8" Screws
2-32	74149	74149	#8-32 Hex Nuts
2-33	74150	74150	#8 Internal Tooth Washer
2-34	41019	41019	Universal Popper Decal
2-35	75267	75267	Tee Bolt

*** Not Shown**

PARTS LIST - CABINET ASSEMBLY

Item No.	Model #2085 Part No.	Model #2086 Part No.	Description .
2-36	47120	47120	Knob
2-37	49059	49509	Rigid Glass Channel 21 5/8" LG. (6 Req) *
2-38	49510	49510	Rigid Glass Channel 15" LG (4 Req) *
2-39	49511	49511	Rigid Glass Channel 17" LG (2 Req) *
2-40	49508	49062	Glass Extrusion 14 9/32" LG (4 Req)

*** Not Shown**

PARTS LIST - CABINET ASSEMBLY

Item No.	Model #1866 Part No.	Model #2656 Part No.	Description
2-0	49601	49589	Complete Cabinet Assembly
2-1	22038	22038	Lead-In Cord
2-2	49440	49440	Heat Element 50 Watt
2-3	47328	47328	Glide Delrin Foot
2-4	47561	47561	Magnetic Catch
2-5	49395	49395	Door
2-6	76097	76097	Label, Unplug to Clean
2-7	41314	41314	#10-24 X 3/4" Screw
2-8	49519	49519	Front Glass- Measures: 22 3/8" X 16 15/16"
2-9	49518	49518	Side Glass- Measures: 22 3/8" X 14 15/16"
2-10	49506	49506	Bottom Corn Pan
2-11	49091	49091	Wire Duct
2-12	49450	49452	Top Pan
2-13	49145	49145	Drop Panel
2-14	49097	49166	Bottom Pan
2-15	49100	49100	Old Maid Pan
2-16	49425	49425	Strip Heater Bracket
2-17	49104	49104	Cover, Corner Cover
2-18	49105	49105	Corner Cover
2-19	49605	49514	Right Rear Corner Post
2-20	49603	49513	Left Rear Corner Post
2-21	49607	49516	Left Front Corner Post
2-22	49608	74164	Glass Extrusion 16 9/32" Lg (2)
2-23	76026	76026	Strain Relief #SR-6P3-4
2-24	77506	49158	Decal, Front Glass
2-25	49123	49123	Crutch Tip
2-26	49606	49515	Right Front Corner Post
2-27	41359	41359	Left Female Hinge NM
2-28	41349	41349	Left Male Hinge
	61373	61373	Right Female Hinge
	41350	41350	Right Male Hinge
2-29	47702	47702	#8-32 Acorn Nut
2-30	42227	42227	#8-32 x 3/8" Screws
2-31	42044	42044	#8-32 x 3/8" Screws
2-32	74149	74149	#8-32 Hex Nut
2-33	74150	74150	#8 Internal Tooth Washer
2-34	41019	41019	Universal Popper Decal
2-35	75267	75267	Tee Bolt

PARTS LIST - CABINET ASSEMBLY

Item No.	Model #2085 Part No.	Model #2086 Part No.	Description .
2-36	47120	47120	Knob
2-37	49059	49509	Rigid Glass Channel 21 5/8" LG. (6 Req) *
2-38	49510	49510	Rigid Glass Channel 15" LG (4 Req) *
2-39	49511	49511	Rigid Glass Channel 17" LG (2 Req) *
2-40	49602	49508	Glass Extrusion 14 9/32" LG (4 Req)

*** Not Shown**

6 oz. KETTLE ASSEMBLY

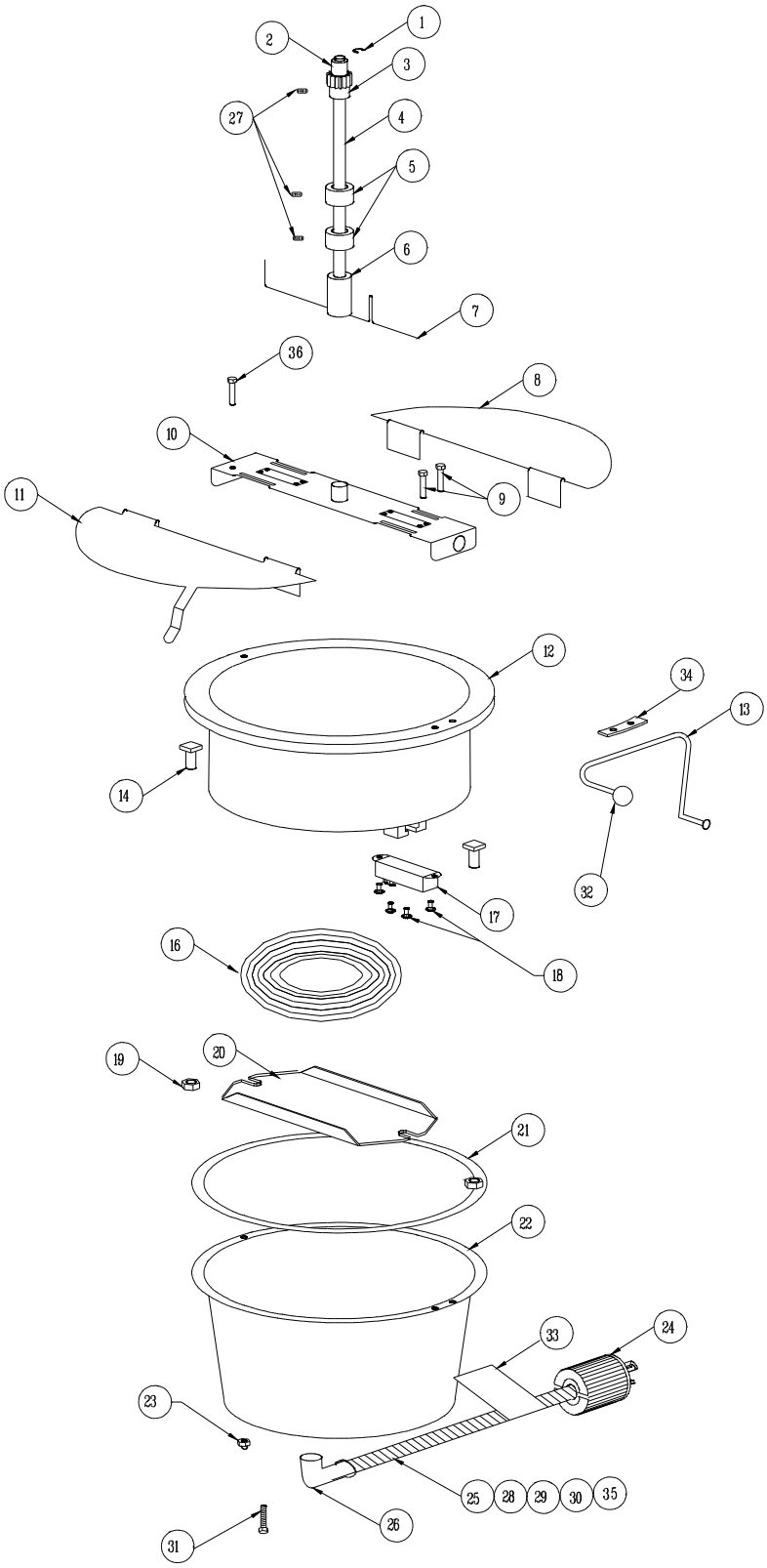

PARTS LIST – 6 oz. KETTLE ASSEMBLY

Models #2085 and #2086

Item No.	Part No.	Description
	49326	6 Oz. Kettle Complete
	49424	6 Oz. Lid & Agitator Assembly
	49327	6 Oz. Kettle Bottom Only
1	49701	External Snap Ring
2	47106	Needle Bearing
3	47060	Spur Gear
4	49349	Agitator Shaft Assembly
5	46649	Set Collar
6	49423	Agitator Weight
7	49011	Stir Rod
8	49016	Rear Kettle Lid
9	49592	#8-32 x 1 1/8" Screws
10	49356	Crossbar Assembly
11	49017	Front Lid With Lifter
12	49312	Kettle Welded Assembly
13	49314	Dump Handle RH
14	49446	Bolt 5 /16 -18 x 5 /8 " Square HD
16	46652	Heat Element 850W
17	47676	Thermostat
18	49136	Screw #6-32 x 3 /16 " Pan HD MS SS
19	49317	5 /16 -18 Serrated Lock Nut
20	49532	Element Retainer Bracket
21	49368	Kettle Gasket
22	49431	Kettle Shell
23	47702	Acorn Nut #8-32
24	49329	Kettle Plug
25	77079-16	Flexible Conduit
26	46241	90 Degree Connector
27	41742	Set Screw #10-32 x 3/16" (3 Req)
28	49086	Red Kettle Wire Assembly
29	49087	White Kettle Wire Assembly
30	49159	Green Kettle Wire Assembly
31	49376	Screw #10-32 x 1"
32	47110	Knob, Dump Handle
33	49350	Caution Label
34	49362	Dump Handle Spacer
35	77080NM	Bushing, Conduit
36	49593	#8-32 x 5/8" Screw
37	49328	Kettle Lead-In Cord Assembly *

* Includes Item No. 24-26, 28-31, 33, and 35

PARTS LIST - 6 oz. KETTLE ASSEMBLY

Models #1866 and #2656

Item No.	Part No.	Description
	49434	6 Oz. Kettle Complete
	49435	6 Oz. Lid & Agitator Assembly
	49433	6 Oz. Kettle Bottom Only
1	49701	External Snap Ring
2	47106	Needle Bearing
3	47060	Spur Gear
4	49437	Agitator Shaft Assembly
5	46649	Set Collar
6	49013	Agitator Weight
7	49011	Stir Rod
8	49016	Rear Kettle Lid
9	89125	Screw #8-32 x ¾" Hex HD
10	49471	Crossbar Assembly
11	49017	Front Lid With Lifter
12	49432	Kettle Welded Assembly
13	49314	Dump Handle RH
14	49446	Bolt 5 /16 -18 x 5 /8 " Square HD
16	46652	Heat Element 850W
17	47676	Thermostat
18	49136	Screw #6-32 x 3 /16 " Pan HD MS SS
19	49317	5 /16 -18 Serrated Lock Nut
20	49532	Element Retainer Bracket
21	49368	Kettle Gasket
22	49431	Kettle Shell
23	47702	Acorn Nut #8-32
24	49329	Kettle Plug
25	77079-16	Flexible Conduit
26	46241	90 Degree Connector
27	41742	Set Screw #10-32 x 3/16" (3 Req)
28	49086	Red Kettle Wire Assembly
29	49087	White Kettle Wire Assembly
30	49159	Green Kettle Wire Assembly
31	49376	Screw #10-32 x 1"
32	47110	Knob, Dump Handle
33	49350	Caution Label
34	49362	Dump Handle Spacer
35	77080NM	Bushing, Conduit
36	47141	#8-32 x 1/2" Phil Pan M/S Zinc Plated
37	49328	Kettle Lead-In Cord Assembly *

* Includes Item No. 24-26, 28-31, 33, and 35

ELECTRICAL SCHEMATIC

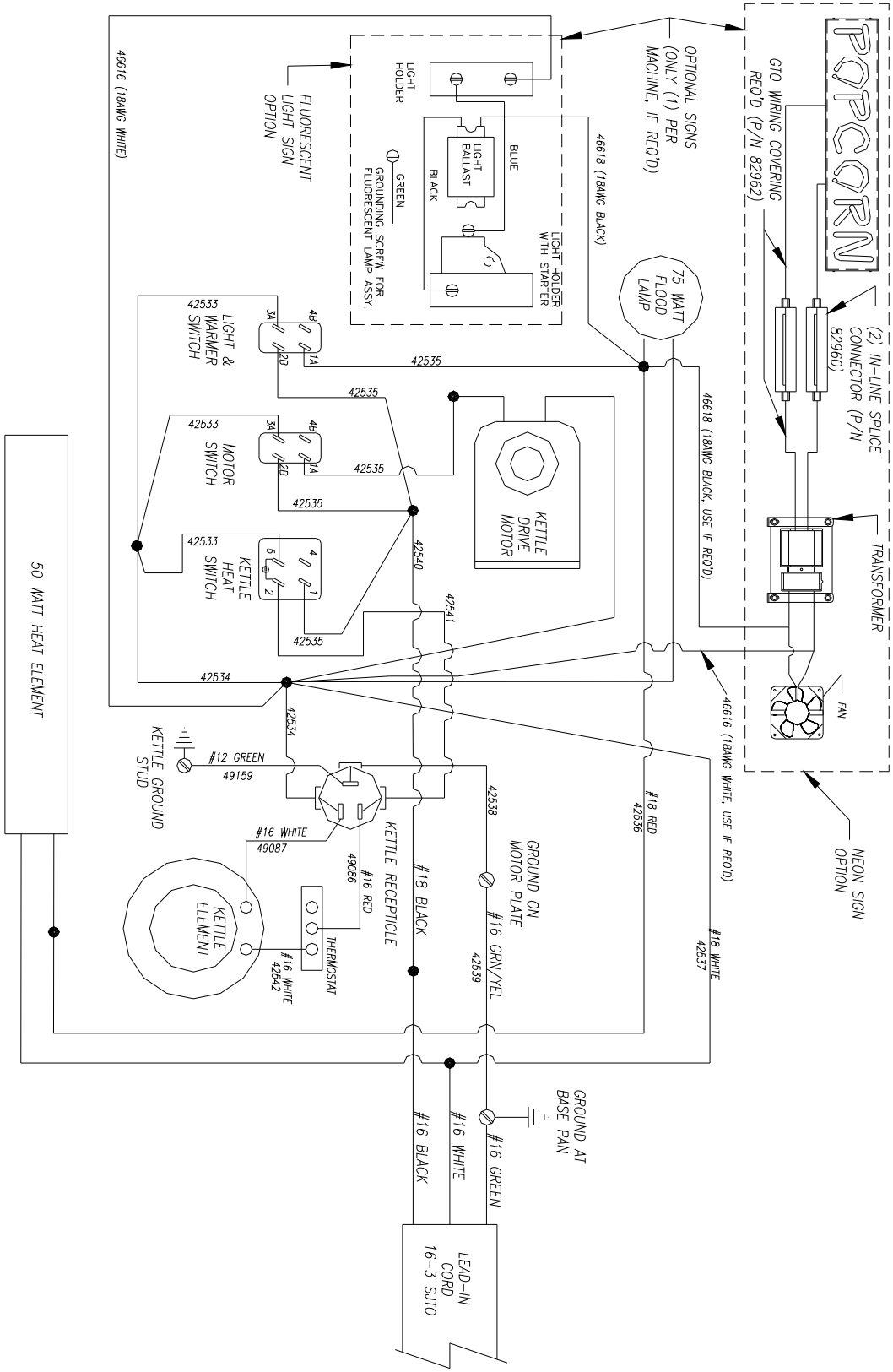

WARRANTY

WE WARRANT to the original purchaser the Gold Medal equipment sold by us to be free from defects in material or workmanship under normal use and service. Our obligation under this warranty shall be limited to the repair or replacement of any defective part for a period of six (6) months from the date of sale to the Original Purchaser with regard to labor and two (2) years with regard to parts and does not cover damage to the equipment caused by accident, alteration, improper use, voltage, abuse, or failure to follow instructions.

THIS WARRANTY IS IN LIEU OF ALL OTHER WARRANTIES EXPRESSED OR IMPLIED, AND OF ALL OTHER OBLIGATIONS OR LIABILITIES ON OUR PART, INCLUDING THE IMPLIED WARRANTY OF MERCHANTIBILITY. THERE ARE NO WARRANTIES WHICH EXTEND BEYOND THE DESCRIPTION ON THE FACE HEREOF. We neither assume, nor authorize any other person to assume for us, any other obligation or liability in connection with the sale of said GOLD MEDAL equipment or any part thereof.

The term “Original Purchaser” as used in this warranty shall be deemed to mean that person, firm, association, or corporation who was billed by the GOLD MEDAL PRODUCTS COMPANY, or their authorized distributor for the equipment.

THIS WARRANTY HAS NO EFFECT AND IS VOID UNLESS THE ORIGINAL PURCHASER FIRST CALLS GOLD MEDAL PRODUCTS COMPANY AT 1-800-543-0862 TO DISCUSS WITH OUR SERVICE REPRESENTATIVE THE EQUIPMENT
PROBLEM, AND, IF NECESSARY, FOR INSTRUCTIONS CONCERNING THE REPAIR OR REPLACEMENT OF PARTS.

NOTE: This equipment is manufactured and sold for commercial use only.

GOLD MEDAL PRODUCTS COMPANY
10700 Medallion Drive
Cincinnati, Ohio 45241-4807 USA
www.gmpopcorn.com
Phone: 1-800-543-0862
Fax: 1-800-542-1496