General Wood Instructions

Sanding

The rule of sanding is “Never across the grain”.

1. Do not tear sandpaper. If you do, the ragged edges will often scratch the wood surface.
2. For flat surfaces, wrap a piece of sandpaper around a block of wood or use a store bought holder. Start with a coarse grade of paper and finish with a fine grade of paper(not included).
3. Be consistent. Do not sand one area with fine and another with coarse grade.

Staining

1. Be sure the wood surface is smooth and clean. Stains can accentuate any roughness or scratches of cross grain sanding. Wipe off any dirt or dust with a soft cloth.
2. A base coat of sealer/primer and a light sanding before applying stain will insure a uniform stain.
3. Apply stains in one direction following the wood grain. Use a soft brush or foam brush. Let the stain penetrate the wood, then wipe off excess stain with a soft cloth.
4. If stain looks too dark, dampen the cloth with water/thinner and wipe until you achieve the desired color. If stain is too light, let dry, then apply another coat of stain and wipe off.

Finishes

1. Outdoor projects may be finished with polyurethane or varnish.

These are toxic and must be used in a well ventilated area. Indoor projects may be finished with decoupage or left unfinished.

Safety First!

This Product May Contain Silicon Gel Packets.
REMOVE PRIOR TO USE!

Colonial Bench Item# WD5792

S&S Worldwide

CALL TOLL-FREE 1-800-243-9232
or **Mail Your Order** to: S&S Worldwide
PO Box 513
Colchester, CT 06415-0513
FAX #: 1-800-566-6678
Customer Service: 1-800-937-3482
Internet home page address: http://www.sswww.com
Email address: service@sswww.com

© Copyright 2007 S&S Worldwide Inc. All rights reserved. No part of this project may be copied or duplicated without the express written permission of S&S Worldwide.

Item No. WD5792 Made in China

Colonial Bench

PLEASE READ ALL INSTRUCTIONS BEFORE STARTING

- ✔ Precut Wooden Pieces
- ✔ Nails
- ✔ Sandpaper
- ✔ Instructions

PREP TIME: 5 MIN

PROJECT TIME: 45 MIN

YOU WILL NEED...

Soft Cloth	Wood Glue
Hammer	Ruler
Paint or Stain	Brushes
Protected Work Surface	

WARNING:
CHOKING HAZARD - Small parts. Not intended for children under 3 years.
SUFFOCATION HAZARD - To avoid danger of suffocation, keep plastic bags away from babies and children. Do not use bags in cribs, carriages, or playpens.

S&S Worldwide

WD5792

START

Product Instructions:

1. Sand all wood parts until smooth. Remove dust with the cloth.

2. Stain or paint your project as desired. A combination of stain and paint looks great. Let dry 30 minutes.

3. a. Glue the (D) center brace between the (B) legs about 2" up from the cut out areas (see Figure A). Let dry 30 minutes.
   b. Using two nails at each side, nail the legs to the brace.

4. a. Apply glue to the top edges of the legs. Center the (A) seat over the tops of the legs and press it into place (see Figure B).
   b. Using 2 nails at each side, nail the seat to the legs.

5. a. Apply glue to one long edge of the seat. Press one of the (C) sides against the edge. Be sure the ends of the side are even with the ends and top of the seat.
   b. Using three nails, evenly spaced, nail the side to the seat. Repeat with the other side piece on the other side of the seat. Let dry 60 minutes.

FIGURE A

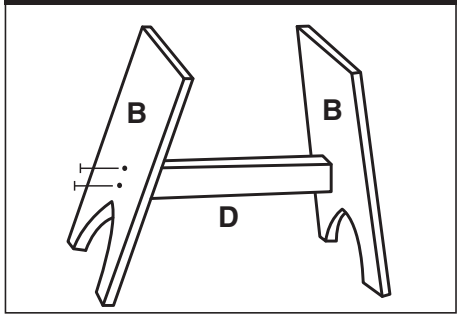

FIGURE B

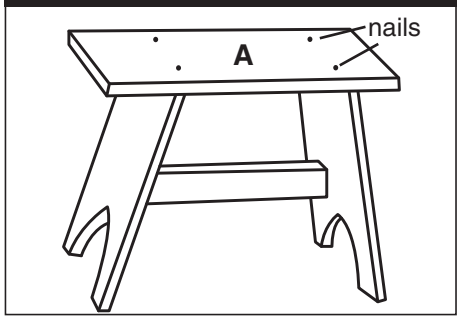

FIGURE C

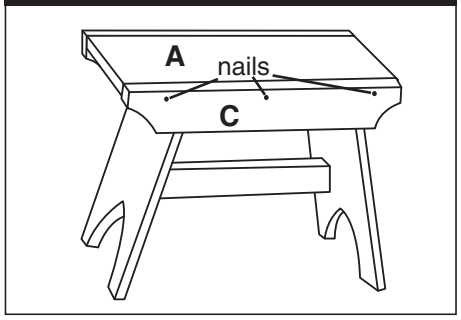

FINISH