GP1658 | Wooden Race Cars (Pk/12)

## MORE IDEAS...

- Have a wooden racecar race.
- Decorate your racecar to match your favorite Nascar®.
- Can you design your own racecar? What parts are similar or different?

## MAKING IT EASY to SAVE MORE on your next order!

**$10 OFF**
Your Next Order of only $39.00 or more.

Please mention Offer Code: **M2467**
Minimum order $39 excludes shipping and taxes.
Limit one per order.
May not be combined with other offers or bid or contract pricing.
See current S&S® catalog or Help at ssww.com for Offer Terms and Conditions.
We reserve the right to terminate this offer at any time without notice.

**Call Toll-Free**
**1-800-243-9232**

**Online:**
**ssww.com**

**Customer Service:**
**1-800-937-3482**

**Email:**
**cservice@ssww.com**

**FAX:**
**1-800-566-6678**

S&S® Worldwide

© Copyright 2012 S&S® Worldwide Inc. All rights reserved. No part of this project may be copied or duplicated without the express written permission of S&S Worldwide.

Reorder Number
GP1658 | 1.1

S&S® Worldwide
MAKING IT EASY
to Help People Play and Learn

Gee-Perz®
Just Add Imagination... We Provide the Rest!

# Wooden Race Cars (Pk/12)

PLEASE READ ALL INSTRUCTIONS BEFORE STARTING

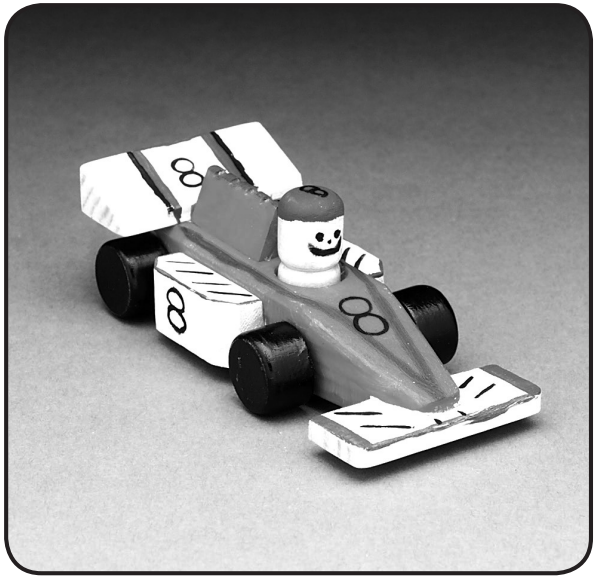

**YOUR KIT CONTAINS:**
- Wooden Parts
- Glue
- Brushes
- Paint
- Tablecloth

**AGE GROUP: 7 and up**
**PREP TIME: 5 minutes**
**PROJECT TIME: 30 minutes**

**YOU WILL NEED:**
- Containers for Water
- Paper Towels

GP1658

## PREP INSTRUCTIONS:

1. Separate wooden parts for the race car in the quantities shown in Figure A.

## INSTRUCTIONS:

1. Using glue, assemble the race car as shown in Figure B. Glue the wheels to the dowel, not the body.

2. Paint the race car as desired. Paint background color first. Allow to dry before painting on detail.

FIGURE A

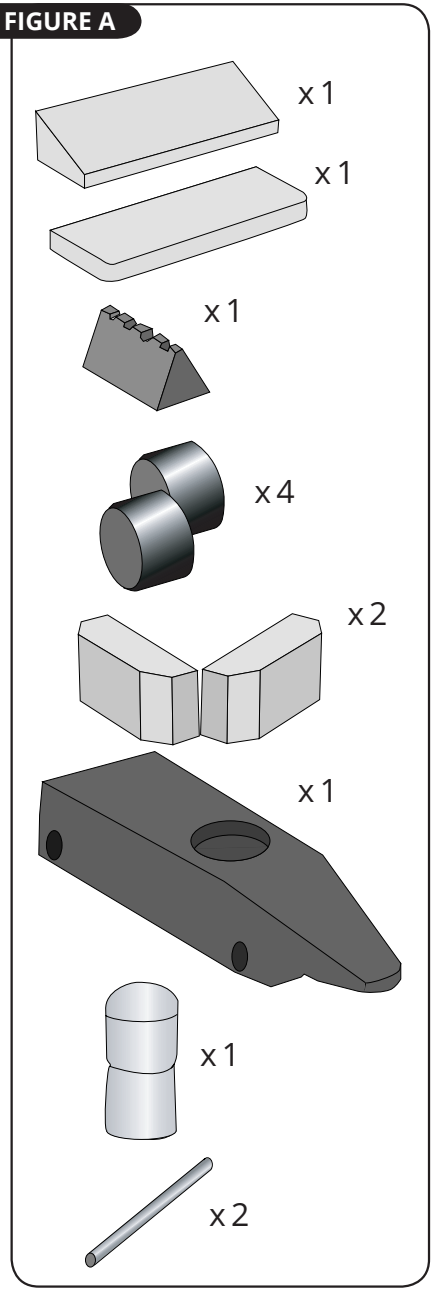

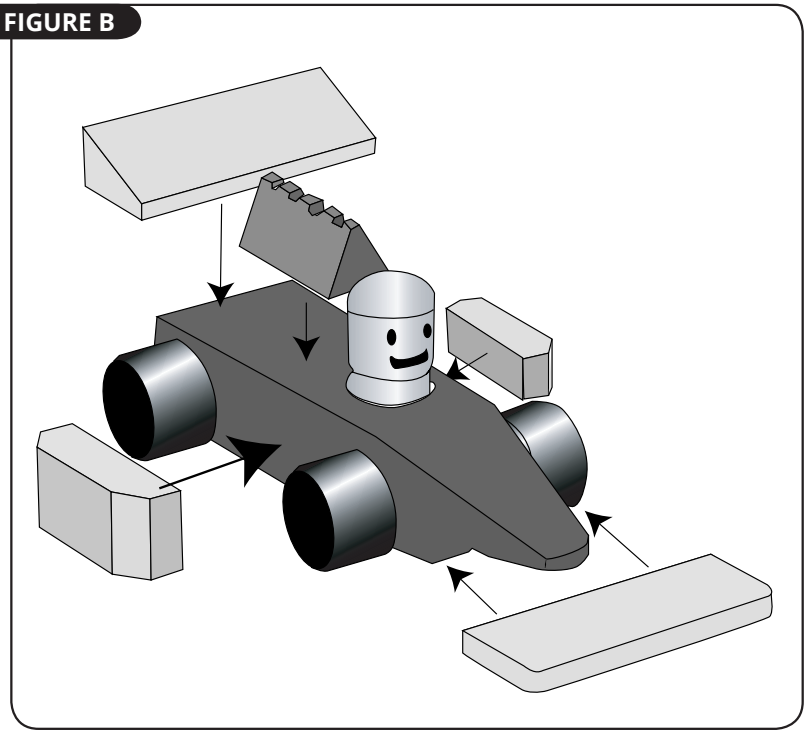
FIGURE B