GP1692

Treasure Chests (Pk/12)

MORE IDEAS...

Fill the treasure chest with assorted novelties for party favors.

Go to ssww.com for more party, novelty and craft ideas.

MAKING IT EASY to SAVE MORE on your next order!

$10 OFF
Your Next Order of only $39.00 or more.

Please mention Offer Code: **M2467**
Minimum order $39 excludes shipping and taxes.
Limit one per order.
May not be combined with other offers or bid or contract pricing.
See current S&S® catalog or Help at ssww.com for Offer Terms and Conditions.
We reserve the right to terminate this offer at any time without notice.

Call Toll-Free
1-800-243-9232

Online:
ssww.com

Customer Service:
1-800-937-3482

Email:
cservice@ssww.com

FAX:
1-800-566-6678

S&S® Worldwide

© Copyright 2012 S&S® Worldwide Inc. All rights reserved. No part of this project may be copied or duplicated without the express written permission of S&S Worldwide.

Reorder Number
GP1692 | 1.1

S&S® Worldwide
MAKING IT EASY
to Help People Play and Learn

Gee-Perz®
Just Add Imagination... We Provide the Rest!

Treasure Chests (Pk/12)

PLEASE READ ALL INSTRUCTIONS BEFORE STARTING

AGE GROUP: 10 and up
PROJECT TIME: 45 minutes

YOUR KIT CONTAINS:
- Cork Lid Panels
- Craftsticks
- Cork Chest Panels
- Wood Knobs
- Assorted Rhinestones
- Beads
- Leather Cord
- Gold Rickrack
- Wood Stain or Paint
- Brushes
- Glue
- Plastic Table Cover

YOU WILL NEED:
- Scissors
- Paper Towels
- Containers for Water
- Ruler
- Tape

GP1692

INSTRUCTIONS:

1. Lay out 30 craftsticks on paper and paint one side of each stick with wood stain. Gently wipe the stain off with a paper towel (if stain is too thick, thin with a few drops of water first). The more you wipe off, the lighter the stain will be. Let dry for a minute or two. Then turn the craftsticks over and repeat. Don't forget to stain the wood knob too!

2. To make the bottom of the treasure chest, lay out 5 craftsticks flat side by side. Be sure they are lined up evenly with the edges touching. Apply glue to the narrowest edge of each craft stick. Place the cork side panel onto the 5 craft sticks. Gently press the panel onto the crafts sticks approximately 1/4" from the rounded ends. Either hold or prop up the cork piece in place until it has a chance to dry and is secure. Repeat on the other side.

3. To make the sides of the chest, lay out 6 craftsticks side by side with the edges lined up and touching. Apply glue to the narrow edges of the front side of the panel. Gently press the panel onto to the craftsticks approximately 1/4" from the rounded ends. Lay out 6 six more craftsticks and repeat the above to complete the other side (see Figure A) Let dry before moving on to the next step.

4. To make the lid of your chest, use a small piece of tape to temporarily hold the cork lid side panel to the bottom cork side panel (see Figure B). Carefully apply glue to the edge of each lid panel and gently lay on 11 craft sticks side by side with edges touching. Again, be sure the placement is approximately 1/4" from the rounded edges of the craftsticks. Let dry before moving on.

5. To secure the lid to the chest, cut two 12" pieces of gold ricrac cord. Glue the pieces around the chest about 1" in from the edges of the chest. Start at the front edge of the lid and go all the way around the back side, bottom and front stopping be fore the lid edge. Trim off any excess and let dry.

6. Once dry, you can now remove the tape from the lid panels and open the chest to apply the hinges. Cut two 1" pieces of leather cord and glue them to the inside back of the lid and chest. Try to align them with the outside strips for extra support. You will probably have to hold them in place while they dry.

7. Glue 4 beads on the bottom for feet, and glue the knob on the lid. Use the assorted rhinestones to decorate the

FIGURE A

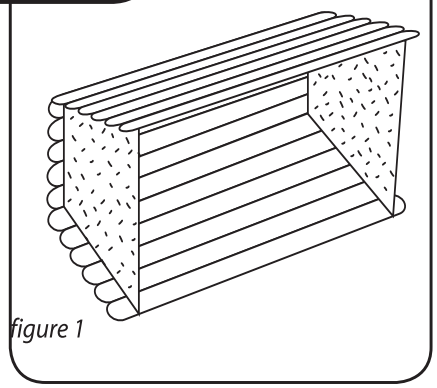

figure 1

FIGURE B

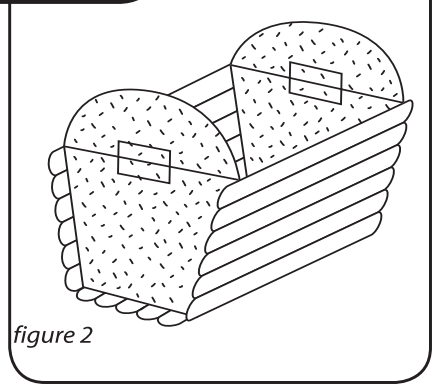

figure 2