GP1302 | Hot Shot Soccer (Pk/48)

MORE IDEAS...

- Paint the base your team colors.
- Decorate your Hot Shot Soccer with other craft supplies.
- Have a Hot Shot Soccer tournament.

MAKING IT EASY to SAVE MORE on your next order!

$10 OFF Your Next Order of only $39.00 or more.

Please mention Offer Code: **M2467**
Minimum order $39 excludes shipping and taxes.
Limit one per order.
May not be combined with other offers
or bid or contract pricing.
See current S&S® catalog or Help at
ssww.com for Offer Terms and Conditions.
We reserve the right to terminate this
offer at any time without notice.

Call Toll-Free
1-800-243-9232

Online:
ssww.com

Customer Service:
1-800-937-3482

Email:
cservice@ssww.com

FAX:
1-800-566-6678

S&S® Worldwide

© Copyright 2012 S&S® Worldwide Inc. All rights reserved. No part of this project may be copied or duplicated without the express written permission of S&S Worldwide.
Kit may contain silicone gel packets, which should be removed before use.

Reorder Number
GP1302 | 2.0

S&S® Worldwide
MAKING IT EASY
to Help People Play and Learn

Gee-Perz®
Just Add Imagination... We Provide the Rest!

Hot Shot Soccer (Pk/48)

PLEASE READ ALL INSTRUCTIONS BEFORE STARTING

AGE GROUP: 8 and up
PROJECT TIME: 60 minutes

YOUR KIT CONTAINS:
- Net Material
- Cardboard Bases
- Chenille Stems
- Foam Balls
- Paint Brushes
- Acrylic Paint
- Plastic Table Cover

YOU WILL NEED:
- Scissors
- Black Marker (optional)
- Ruler

GP1302

INSTRUCTIONS:

1. Paint one side of the cardboard base green. Let dry.

   Outline the goalie and penalty boxes with white paint following the diagram (see Figure A). Let dry.

2. Use a ruler to measure and cut 12" of net material. Fold net material in half so it is approximately 3” wide.

3. Place net material on work surface and thread one chenille stem along the top, long side of the net material. Go over and under every two holes of both layers of net material (see Figure B).

4. Measure and cut one chenille stem in half.

5. Hold a short side of the net material behind the base and carefully align the holes (see Figure C).

Helpful Hint: Align the top corner hole of the net material to the first hole on the base.

FIGURE A

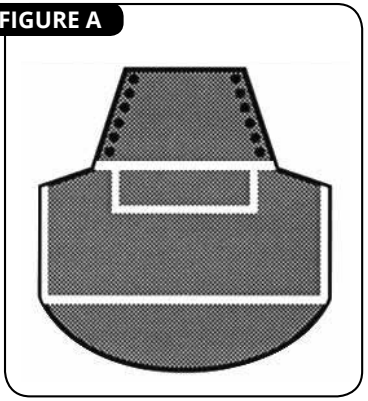

FIGURE B

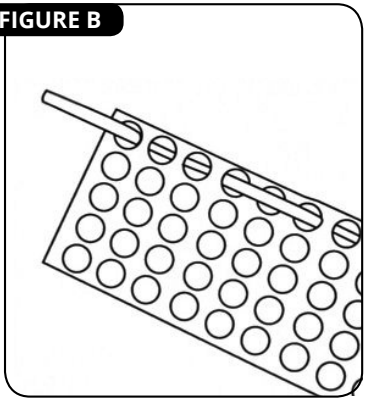

FIGURE C

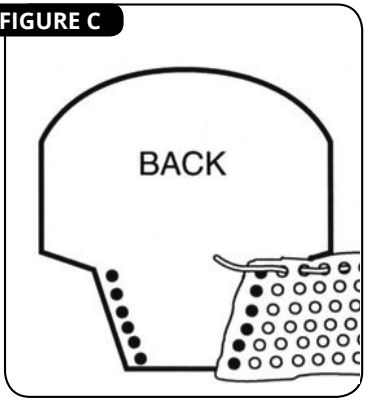

6. Thread the chenille stem, starting from the back, through the net material and base (see Figure D). Lace the chenille stem up one side of the base.

7. Twist the ends behind the backboard (see Figure E).

8. Bring net material across the front of the base and repeat steps 6-8 to secure the other side of the net (see Figure F).

9. Shape the net by bending the chenille stems into a soccer goal shape (see Figure F).

   Optional: Using a marker or paint, decorate the foam ball like a soccer ball, Let dry.

   Now you’re ready to play! Put one hand in the goal and another hand (yours or your partner’s) can “shoot” the ball. Good luck!

FIGURE D

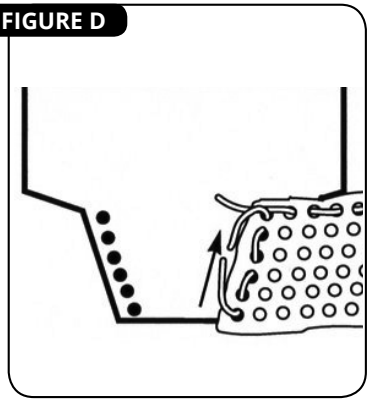

FIGURE E

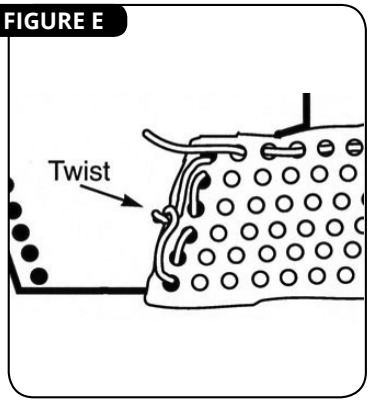
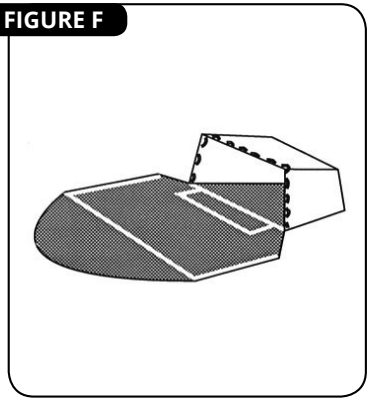
FIGURE F